Current part is item (12) on diagram. Available at www.oshkoshequipment.com

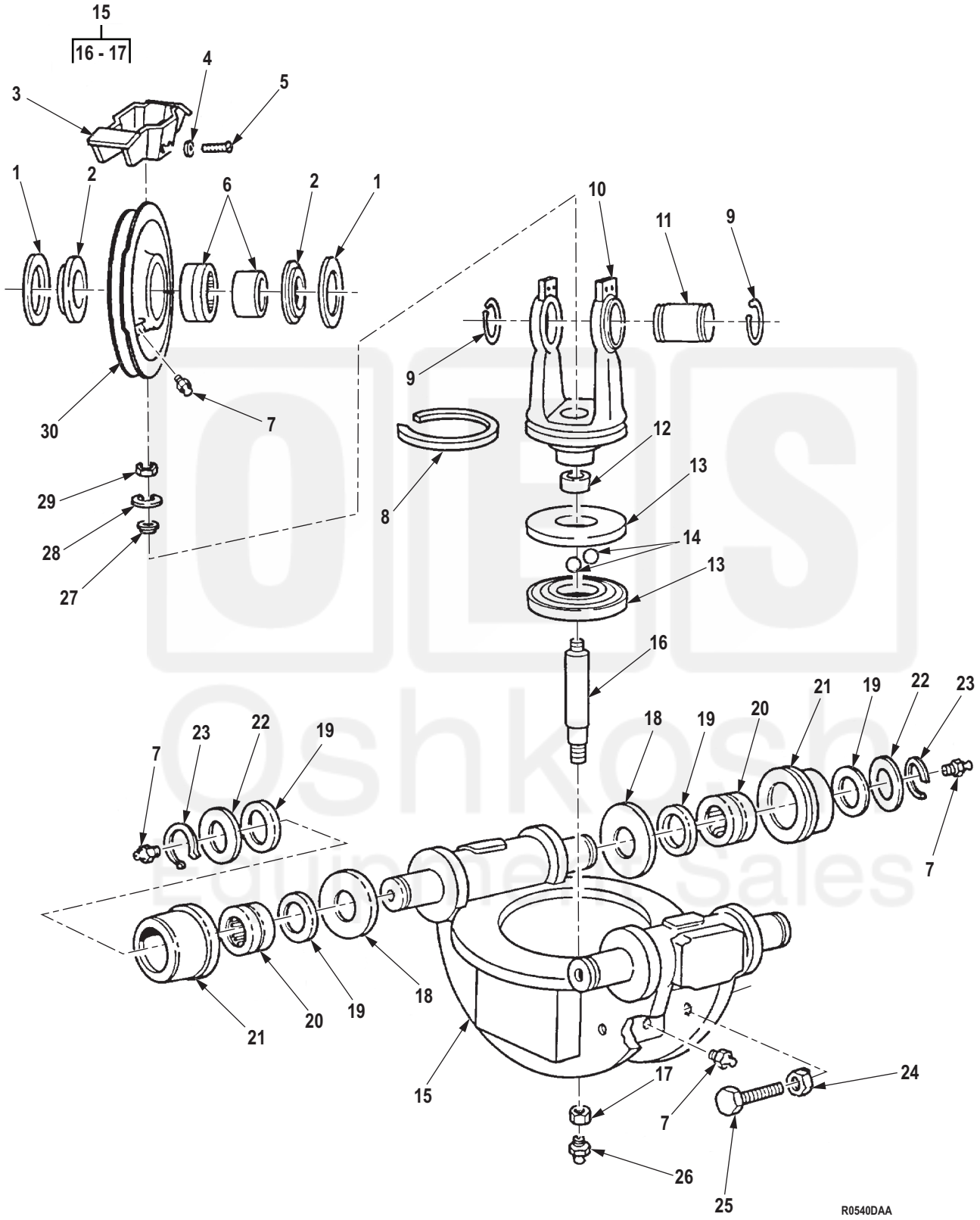

Figure 523. Wrecker Rear Winch Sheave Swivel and Trolley.

Current part is item (12) on diagram. Available at www.oshkoshequipment.com

Current part is item (12) on diagram. Available at www.oshkoshequipment.com

(1) ITEM NO.	(2) SMR CODE	(3) NSN	(4) CAGEC	(5) PART NUMBER	(6) DESCRIPTION AND USABLE ON CODE (UOC)	(7) QTY
					GROUP 2001 HOIST, CAPSTAN, WINDLASS, CRANE OR WINCH ASSEMBLY.	
					FIG. 523. WRECKER REAR WINCH SHEAVE SWIVEL AND TROLLEY.	
1	PAFZZ	3120-00-740-9953	19207	7409953	BEARING,WASHER,THRU UOC: DAL,V18,ZAL	2
2	PAFZZ	5310-01-138-5516	19207	7954539-1	WASHER,SHOULDERED UOC: DAL,V18,ZAL	2
3	PAFZZ	3020-00-740-9893	19207	7409893	GUARD,MECHANICAL DR UOC: DAL,V18,ZAL	1
4	PAFZZ	5310-00-637-9541	00198	132661	WASHER,LOCK UOC: DAL,V18,ZAL	4
5	PAFZZ	5305-00-269-3234	80204	B1821BH038F075N	SCREW,CAP,HEXAGON H UOC: DAL,V18,ZAL	4
6	PAFZZ	3110-00-752-7760	96906	MS51961-40	BEARING,ROLLER,NEED UOC: DAL,V18,ZAL	1
7	PAFZZ	4730-00-050-4208	10001	297692PC104	FITTING,LUBRICATION UOC: DAL,V18,ZAL	7
8	PAFZZ	5330-00-740-9889	19207	7409889	FELT,MECHANICAL,PRE UOC: DAL,V18,ZAL	1
9	PAFZZ	5325-00-200-7234	96906	MS16624-1275	RING,RETAINING UOC: DAL,V18,ZAL	2
10	PFFZZ	5340-00-740-9892	19207	7409892	CLEVIS,ROD END UOC: DAL,V18,ZAL	1
11	PAFZZ	3040-00-470-2097	19207	8690893	SHAFT,STRAIGHT UOC: DAL,V18,ZAL	1
12	PAFZZ	3110-00-227-3239	96906	MS51961-6	BEARING,ROLLER,NEED UOC: DAL,V18,ZAL	1
13	PAFZZ	3110-00-740-9896	19207	7409896	RING,BEARING,INNER UOC: DAL,V18,ZAL	2
14	PAFZZ	3110-00-100-6159	96906	MS19059-2424	BALL,BEARING UOC: DAL,V18,ZAL	45
15	XAFZZ	2520-01-114-7402	19207	8690894	FRAME ASSY,TROLLY UOC: DAL,V18,ZAL	1
16	PBFZZ	3040-00-740-9950	61465	302295	. SHAFT,SHOULDERED UOC: DAL,V18,ZAL	1
17	PAFZZ	5310-00-045-1031	24617	451031	. NUT,SELF-LOCKING,HE SHAFT TROLLEY PIVOT UOC: DAL,V18,ZAL	1
18	PAFZZ	3120-00-740-9958	19207	7409958	BEARING,WASHER,THRU UOC: DAL,V18,ZAL	4
19	PAFZZ	5330-00-740-9959	19207	7409959	FELT,MECHANICAL,PRE UOC: DAL,V18,ZAL	8

Current part is item (12) on diagram. Available at www.oshkoshequipment.com

Current part is item (12) on diagram. Available at www.oshkoshequipment.com

(1) ITEM NO.	(2) SMR CODE	(3) NSN	(4) CAGEC	(5) PART NUMBER	(6) DESCRIPTION AND USABLE ON CODE (UOC)	(7) QTY
20	PAFZZ	3110-00-227-3253	81346	MS51961-30	BEARING,ROLLER,NEED UOC: DAL,V18,ZAL	4
21	PAFZZ	3120-00-740-9960	19207	7409960	BEARING,SLEEVE UOC: DAL,V18,ZAL	4
22	PAFZZ	5310-00-740-9962	61465	M307570	WASHER,FLAT TROLLEY ASSEMBLY FRAME UOC: DAL,V18,ZAL	4
23	PAFZZ	5325-00-252-4758	96906	MS16624-1200	RING,RETAINING UOC: DAL,V18,ZAL	4
24	PAFZZ	5310-00-834-8732	96906	MS35691-33	NUT,PLAIN,HEXAGON UOC: DAL,V18,ZAL	4
25	PAFZZ	5305-01-119-8889	11828	STSW-5306-0620	SCREW,CAP,SOCKET H UOC: DAL,V18,ZAL	4
26	PAFZZ	4730-00-172-0034	81343	AS15003-6-P	FITTING,LUBRICATION UOC: DAL,V18,ZAL	1
27	PAFZZ	5310-00-596-7753	72962	22NA797-82	NUT,SELF-LOCKING,PL UOC: DAL,V18,ZAL	1
28	PAFZZ	5310-00-596-7797	19207	7409955	WASHER,FLAT UOC: DAL,V18,ZAL	1
29	PAFZZ	5310-00-449-2378	80205	MS21245L8	NUT,SELF-LOCKING,HE UOC: DAL,V18,ZAL	1
30	PAFZZ	3020-00-740-9952	61465	M307580	PULLEY,GROOVE UOC: DAL,V18,ZAL	1

END OF FIGURE

Current part is item (12) on diagram. Available at www.oshkoshequipment.com